FUNCTION	MOTOR 1	MOTOR 2	MOTOR 3	5VDC	GND	HALL 1	HALL 2	HALL 3
PIN	PIN 1	PIN 2	PIN 3	PIN 4	PIN 5	PIN 6	PIN 7	PIN 8

REVISIONS				
ZONE	REV.	DESCRIPTION	DATE	APPROVED
	A	INITIAL RELEASE	01/16/2025	RA

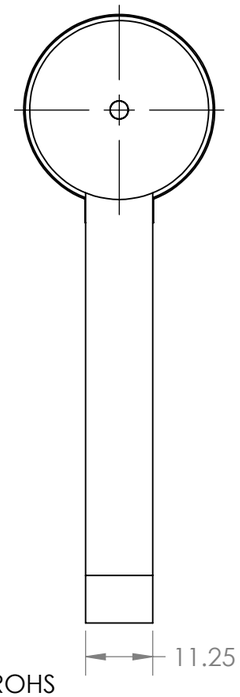

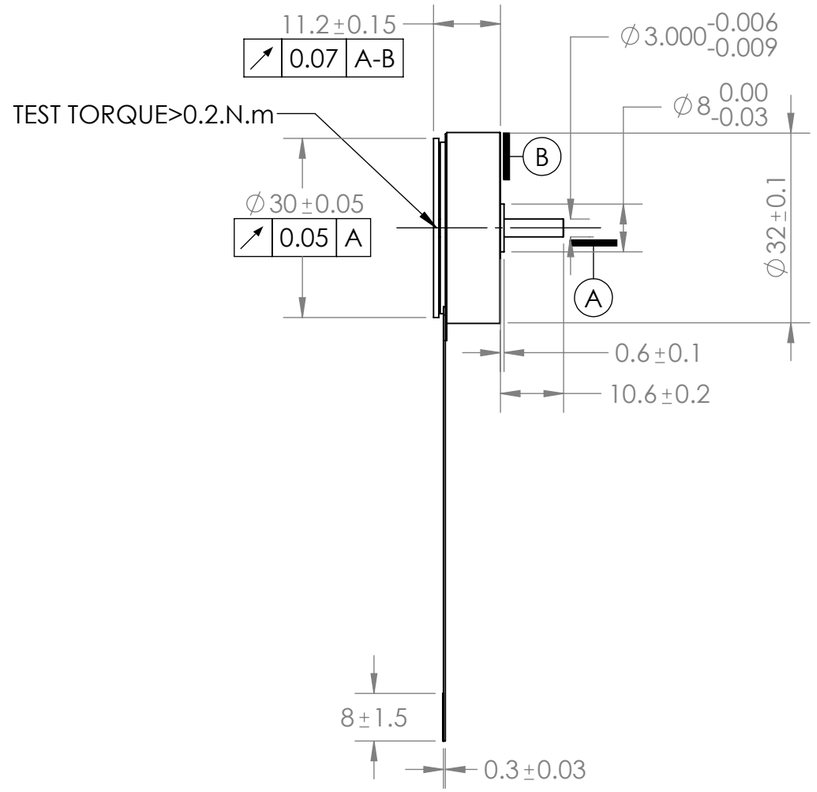

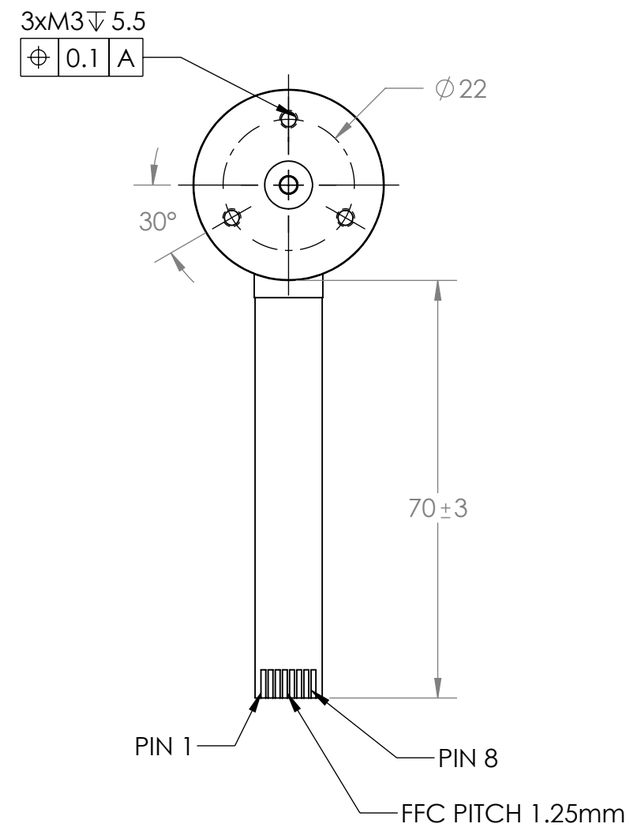

1.CONFORMITY TO ROHS
CONFORMITY TO REACH
2.OPERATING TEMPERATURE RANGE: -30°C -- +80°C
3.DIELECTRIC STRENGTH: 500VDC FOR ONE MINUTE
4.INSULATION RESISTANCE:MIN.100MOHM,500VDC
5. INSULATION CLASS: CLASS B
6. COIL SPECIFICATION:
- NUMBER OF TURNS:110
- WIRE NOMINAL DIAMETER:0.23
- WIRE INSULATION CLASS: CLASS F

8. HALL SENSOR TYPE: 2442SO-N
9. ROTATION DIRECTION: DUAL (VIEW ONTO MOTOR FRONT SIDE)

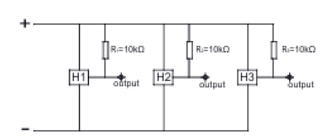

Hall sensor type: 2442SO-N
$R_1=R_2=R_3=10K\Omega$

MOTOR DATA				
NOMINAL VOLTAGE	U	VDC	24	Ke= .87 V/krpm
NO LOAD SPEED ±10 %	no	RPM	28000	
NO LOAD CURRENT TYPICAL	Io	mA	150	Kt= 8.3 mNm/A
NOMINAL SPEED	nN	RPM	24,000	
NOMINAL TOURQUE	MN	mN.m	13	
NOMINAL CURRENT	IN	A	1.5	
TERMINAL RESISTANCE PHASE TO PHASE ±10 %	R	Ω	4	
TERMINAL INDUCTANCE PHASE TO PHASE ±20 %	L	mH	0.268	

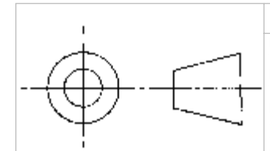

THIS DRAWING CONTAINS PROPRIETARY INFORMATION OF THE ORBEX GROUP AND MAY NOT BE IN WHOLE OR IN PART DUPLICATED OR DISCLOSED OR USED FOR MANUFACTURE OF ANY PART DISCLOSED HEREIN WITHOUT WRITTEN PERMISSION OF THE ORBEX GROUP.
CONFIDENTIAL

UNLESS OTHERWISE SPECIFIED:
DRAWING SYMBOLS & TOLERANCES PER ANSI Y14.5
DIMENSIONS ARE METRIC
TOLERANCES:

DECIMALS	LINEAR	ANGULAR
.X	±0.2	±0.5DEG
.XX	±0.02	±0.2DEG
.XXX	±0.005	±0.01DEG

INTERPRET GEOMETRIC TOLERANCING PER: ANSI Y14.5

MATERIAL: SEE CHART
FINISH: CLEAN
DRAWN: Sun KPO 01/16/2025

Orbex Group

TITLE:
BLDC MOTOR, 32mm DIAMETER,
11.2mm HEIGHT,
24V, 24K NOMINAL SPEED,
KT=8.3 MNM/A

SIZE	PRT. NO.	REV
B	101809	A

SCALE: 1:1 | SHEET 1 OF 1