REVISIONS				
ZONE	REV.	DESCRIPTION	DATE	APPROVED
	1	CUSTOMER INFORMATIONAL	3/23/2017	RA

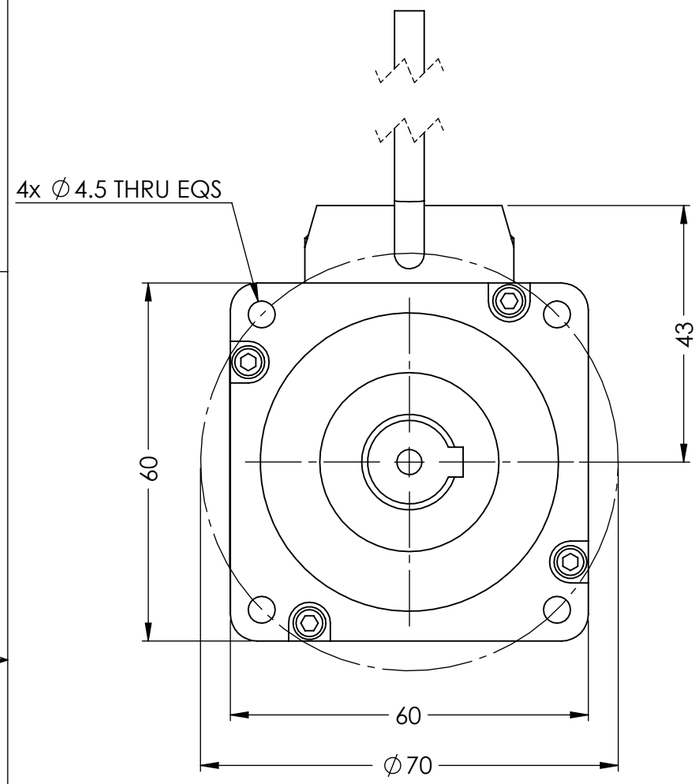

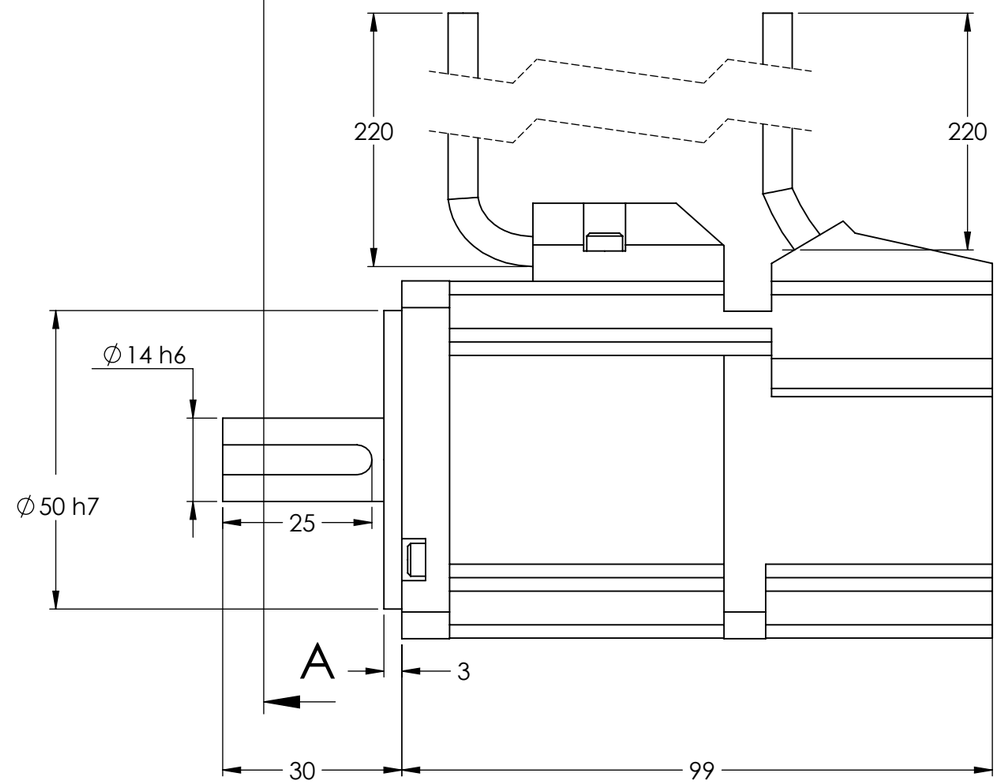

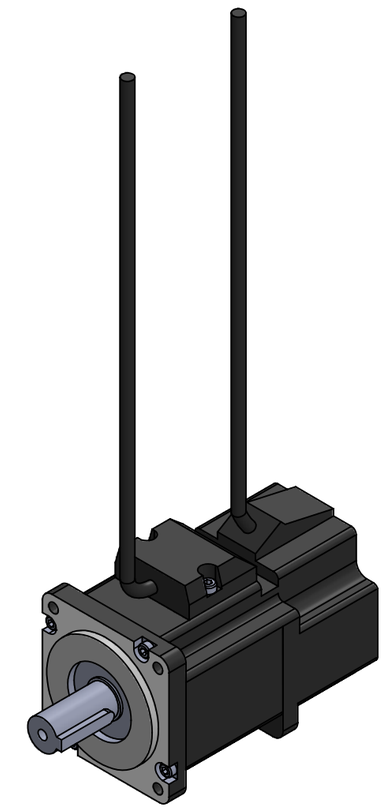

HPM60-01-200-01 Specifications

Parameter	Unit	Value
Rated Power	W	200
Rated Voltage	$V_{(AC)}$	200
Continuous Stall Torque	Nm	.64
Max Torque	Nm	1.92
Rated Speed/Max Speed	rpm	3000/5000
Rated Current	$A_{(peak)}$	1.5
Max Current	$A_{(peak)}$	4.5
Ke : Back EMF Constant	$V_{(peak)}$/krpm	43.8
Kt : Torque Constant	Nm/$A_{(peak)}$	0.42
Moment of Inertia	$x10^{-4}$ kgm^2	0.16
Number of Poles	#	8
Mass	kg	0.96

Feedback Element	Optical Encoder (2500 line)
Operating Environment	Temperature: 0-40°C; Humidity <95%RH (Free from condensing)
Storage Environment	Temperature: -20-65°C; Humidity <95%RH (Free from condensing)
Insulation	Class F (155°C Winding Temperature)
Protection Class	IP65
Duty Cycle	Continuous

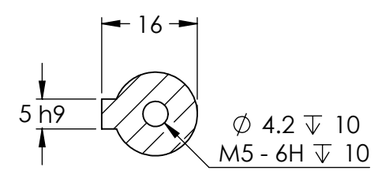

SECTION A-A

Motor Plug (AMP 172167-1)				
Mates with AMP 172159-1				
Plug Serial Number	1	2	3	4
Winding Lead Wire	U	V	W	PE

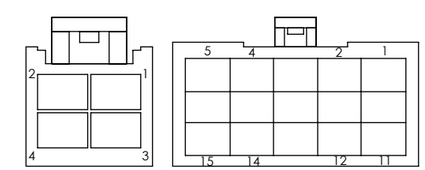

Encoder Plug (AMP 172171-1) Mates with AMP 172163-1															
Plug Serial Number	2	3	4	5	6	7	8	9	10	11	12	13	14	15	1
Encoder Signal	5V	0V	B+	Z-	U+	Z+	U-	A+	V+	W+	V-	A-	B-	W-	PE

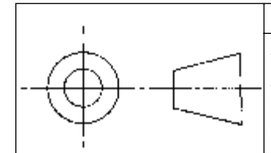

THIS DRAWING CONTAINS PROPRIETARY INFORMATION OF THE ORBEX GROUP AND MAY NOT BE IN WHOLE OR IN PART DUPLICATED OR DISCLOSED OR USED FOR MANUFACTURE OF ANY PART DISCLOSED HEREIN WITHOUT WRITTEN PERMISSION OF THE ORBEX GROUP.

CONFIDENTIAL

UNLESS OTHERWISE SPECIFIED:

DRAWING SYMBOLS & TOLERANCES PER ANSI Y14.5
DIMENSIONS ARE METRIC
TOLERANCES:

DECIMALS	LINEAR	ANGULAR
.X	±0.2	±0.5DEG
.XX	±0.02	±0.2DEG
.XXX	±0.005	±0.01DEG

INTERPRET GEOMETRIC TOLERANCING PER: ANSI Y14.5

MATERIAL

FINISH CLEAN

DRAWN Sun KPO 23-03-2017

Orbex Group

TITLE:

SERVO MOTOR

SIZE	PRT. NO.	REV
B	HPM60-01-200-01	1

SCALE: 1:1 SHEET 1 OF 1