REVISIONS				
ZONE	REV.	DESCRIPTION	DATE	APPROVED
	A	CUSTOMER INFORMATIONAL	10/11/2019	RA
	B	CORRECTED OVERALL LENGTH VIA ENCODER MATE TO MOTOR. CHANGED MOTOR DIMENSION FROM: 42.3 MAX TO 42.5 MAX	11/21/2019	RA

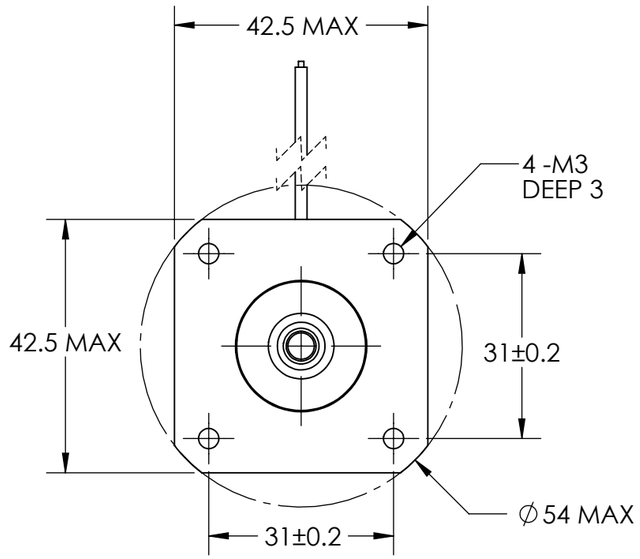

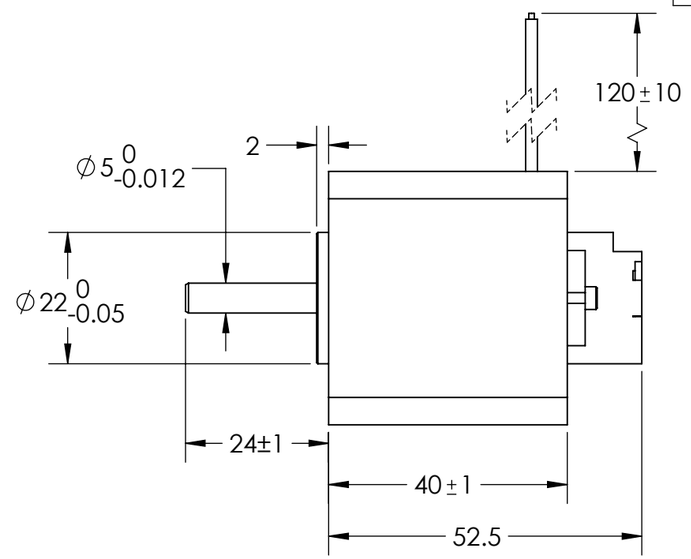

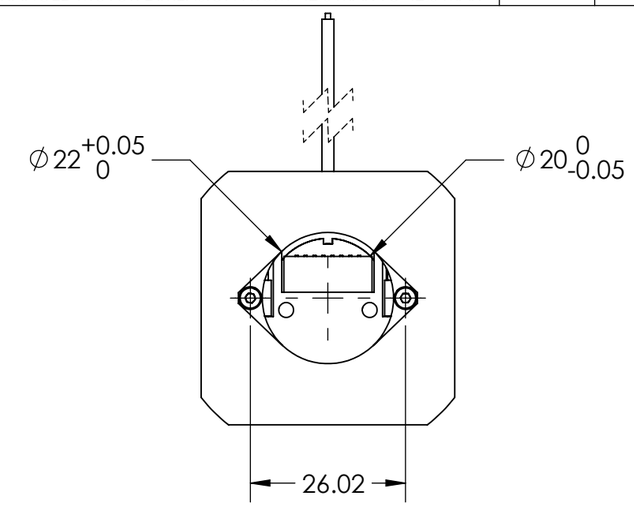

EC4240 Specifications		
Parameter	**Unit**	**Value**
Rated Power	W	25.00
Rated Voltage	VDC	24.00
Continous Stall Torque	N-m	0.07
Max Torque	N-m	0.14
Rated Speed/Max Speed	rpm	4000/6800
Rated Current	$A_{(peak)}$	2.12
Max.Current	$A_{(peak)}$	4.24
Ke : Back EMF Constant	$V_{(peak)}$/krpm	3.50
Kt : Torque Constant	Nm/$A_{(peak)}$	0.03
Resistance	Ω	1.40
Inductance	mH	1.80
Moment of Inertia	gcm²	24.00
Number of Poles	#	8.00
Mass	g	250

Winding Type	3-phase
Hall Sensors	120° electrical spacing
Pole Count	8
Shaft Runout	.025 mm
Radial Play	.02 mm @ 450 g
End Play	.08 mm @ 450 g
Max Radial Force	28 N @20 mm from flange
Max Axial Force	10N
Insulation Class	B
Dielectric Strength	500 VDC for 60s
Insulation Resistance	>100MΩ, 500 VDC

Encoder Specifications	
Feedback Type	Magnetic Incremental Encoder
Power Requirements	5 VDC ±10%
Resolution	4096 counts/rev.
Signals	A+, A-, B+, B-, Z+, Z-

PIN 1	5 V
PIN 2	A+
PIN 3	A-
PIN 4	B+
PIN 5	B-
PIN 6	Z+
PIN 7	Z-
PIN 8	GND

ENCODER MATING CONNECTOR
JST, ZHR8

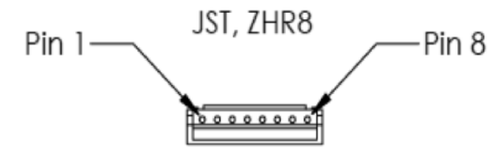

Motor Cable AWG 22		
A	B	C
YEL	RED	BLK

HALL SENSORS AWG 26				
5VDC	GND	A	B	C
RED	BLK	BLU	GRN	WHT

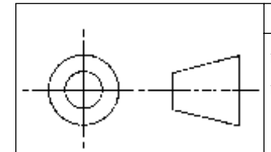

THIS DRAWING CONTAINS PROPRIETARY INFORMATION OF THE ORBEX GROUP AND MAY NOT BE IN WHOLE OR IN PART DUPLICATED OR DISCLOSED OR USED FOR MANUFACTURE OF ANY PART DISCLOSED HEREIN WITHOUT WRITTEN PERMISSION OF THE ORBEX GROUP.
CONFIDENTIAL

UNLESS OTHERWISE SPECIFIED:
DRAWING SYMBOLS & TOLERANCES PER ANSI Y14.5
DIMENSIONS ARE METRIC
TOLERANCES:

DECIMALS	LINEAR	ANGULAR
.X	±0.2	±0.5DEG
.XX	±0.02	±0.2DEG
.XXX	±0.005	±0.01DEG

INTERPRET GEOMETRIC TOLERANCING PER: ANSI Y14.5

MATERIAL: SEE CHART
FINISH: Clean
DRAWN: SunKPO 11/21/2019

Orbex Group

TITLE:
EC4240

SIZE	PRT. NO.	REV
B	100115	B

SCALE: 1:1 | SHEET 1 OF 1