REVISIONS				
ZONE	REV.	DESCRIPTION	DATE	APPROVED
	A	CUSTOMER INFORMATIONAL	10/11/2019	RA
	B	CHANGED MOTOR CABLE COLOR CODE. CHANGED MOTOR DIMENSION FROM: 42.3 MAX TO 42.5 MAX	11/21/2019	RA
	C	ADD HALL CONNECTOR	06/04/2020	RA

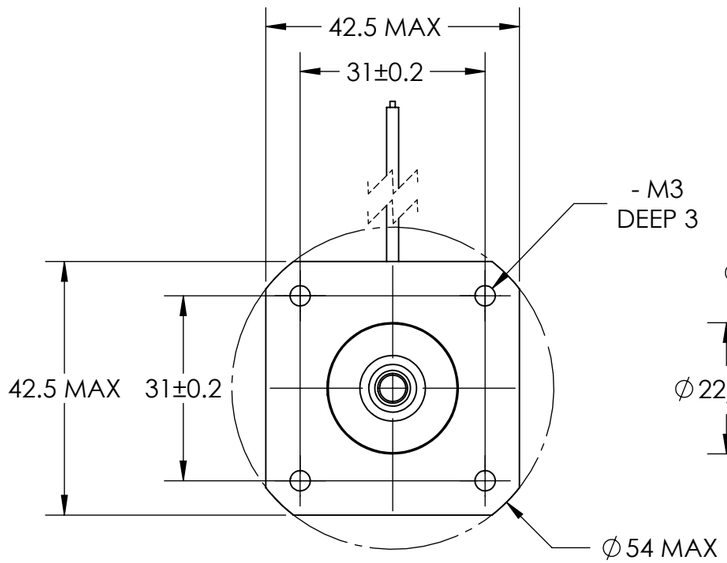

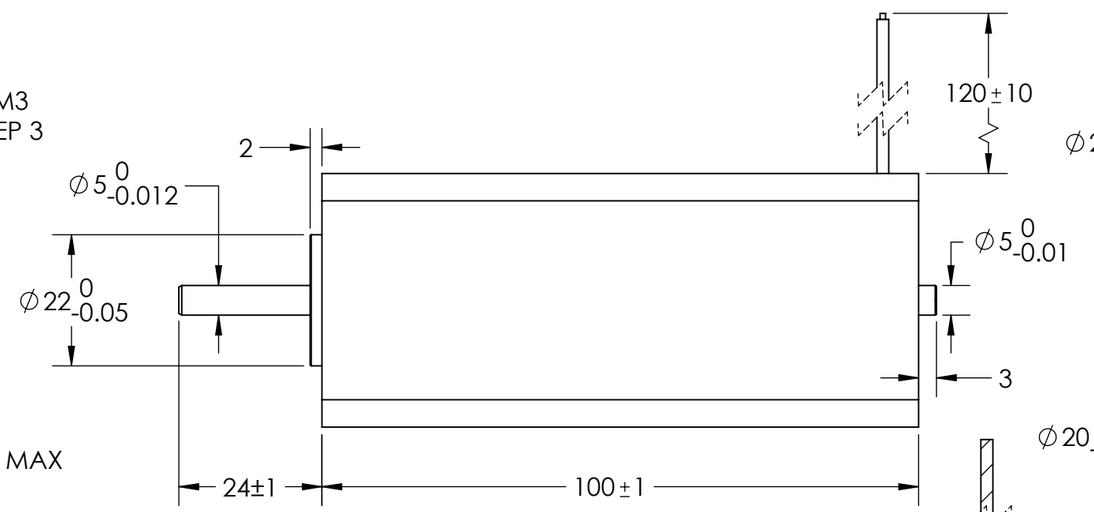

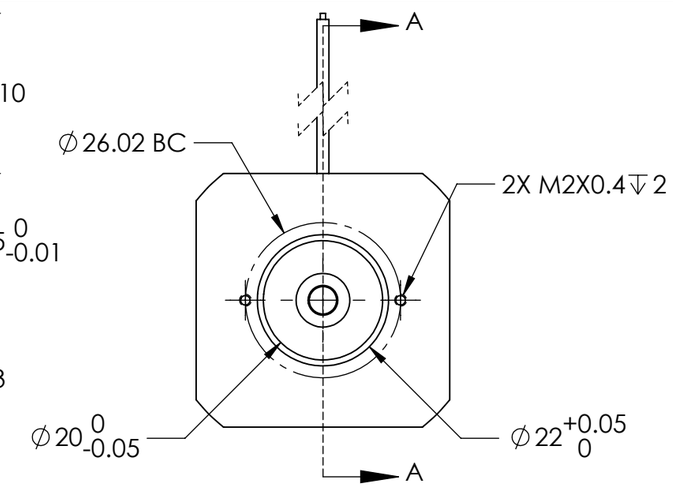

EC42100 48 Specifications		
Parameter	**Unit**	**Value**
Rated Power	W	100
Rated Voltage	VDC	48.00
Continous Stall Torque	N-m	0.30
Max Torque	N-m	0.60
Rated Speed/Max Speed	rpm	4000/6800
Rated Current	$A_{(peak)}$	4.55
Max.Current	$A_{(peak)}$	9.09
Ke : Back EMF Constant	$V_{(peak)}$/krpm	7.00
Kt : Torque Constant	$Nm/A_{(peak)}$	0.066
Resistance	Ω	
Inductance	mH	
Moment of Inertia	gcm^2	96.00
Number of Poles	#	8.00
Mass	g	850

Winding Type	3-phase
Hall Sensors	120° electrical spacing
Pole Count	8
Shaft Runout	.025 mm
Radial Play	.02 mm @ 450 g
End Play	.08 mm @ 450 g
Max Radial Force	28 N @20 mm from flange
Max Axial Force	10N
Insulation Class	B
Dielectric Strength	500 VDC for 60s
Insulation Resistance	>100MΩ, 500 VDC

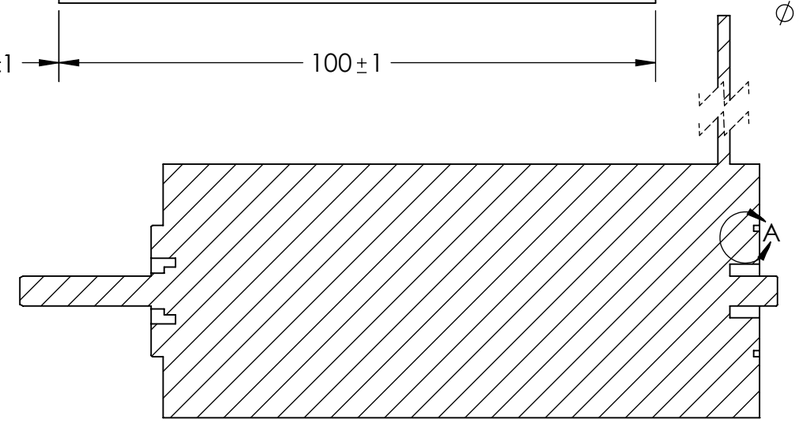

SECTION A-A

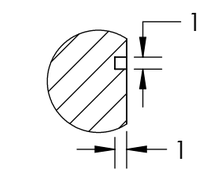

DETAIL A
SCALE 2 : 1

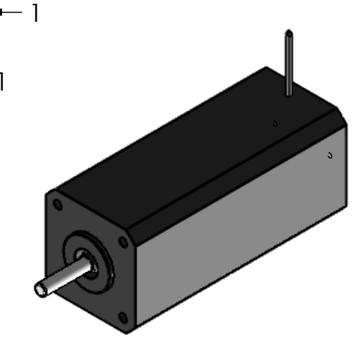

HALL SENSOR PINOUT CHART		
PIN #	SIGNAL	COLOR
1	5 VDC	RED
2	GROUND	BLACK
3	A	BLUE
4	B	GREEN
5	C	WHITE

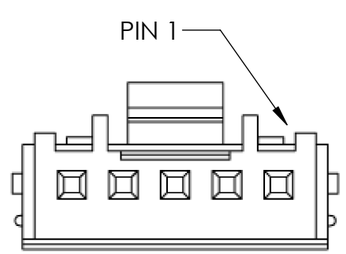

MOLEX 512160500
CONNECTOR

MOTOR CABLE AWG 18		
A	B	C
YEL	RED	BLK

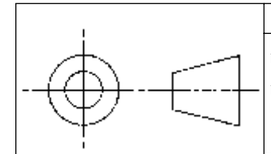

THIS DRAWING CONTAINS PROPRIETARY INFORMATION OF THE ORBEX GROUP AND MAY NOT BE IN WHOLE OR IN PART DUPLICATED OR DISCLOSED OR USED FOR MANUFACTURE OF ANY PART DISCLOSED HEREIN WITHOUT WRITTEN PERMISSION OF THE ORBEX GROUP.
CONFIDENTIAL

UNLESS OTHERWISE SPECIFIED:
DRAWING SYMBOLS & TOLERANCES PER ANSI Y14.5
DIMENSIONS ARE METRIC
TOLERANCES:

DECIMALS	LINEAR	ANGULAR
.X	±0.2	±0.5DEG
.XX	±0.02	±0.2DEG
.XXX	±0.005	±0.01DEG

INTERPRET GEOMETRIC TOLERANCING PER: ANSI Y14.5

MATERIAL: SEE CHART
FINISH: Clean
DRAWN: SunKPO 06/04/2020

Orbex Group

TITLE:
EC42100 48

SIZE	PRT. NO.	REV
B	100114	C

SCALE: 1:1 | SHEET 1 OF 1