REVISIONS				
ZONE	REV.	DESCRIPTION	DATE	APPROVED
	A	CUSTOMER INFROMATIONAL	10/11/2019	RA

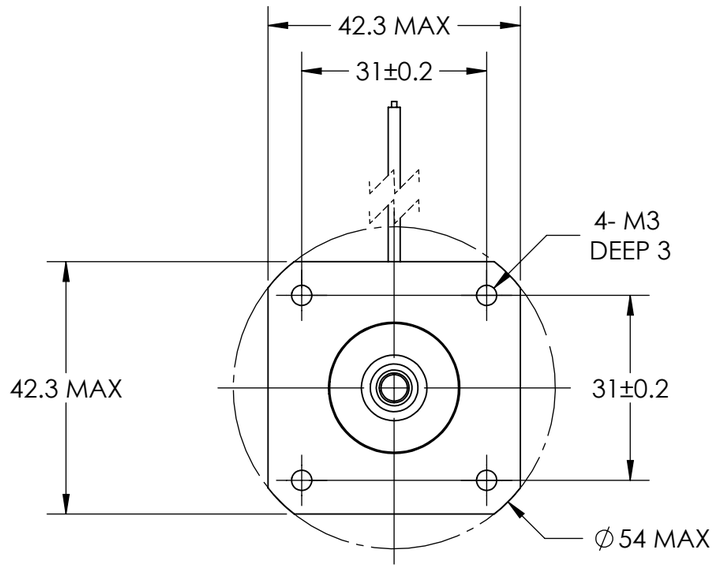

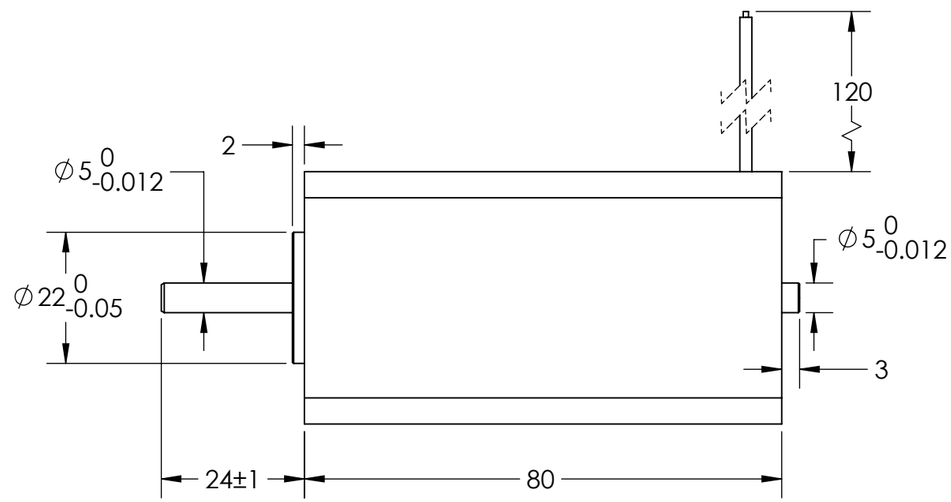

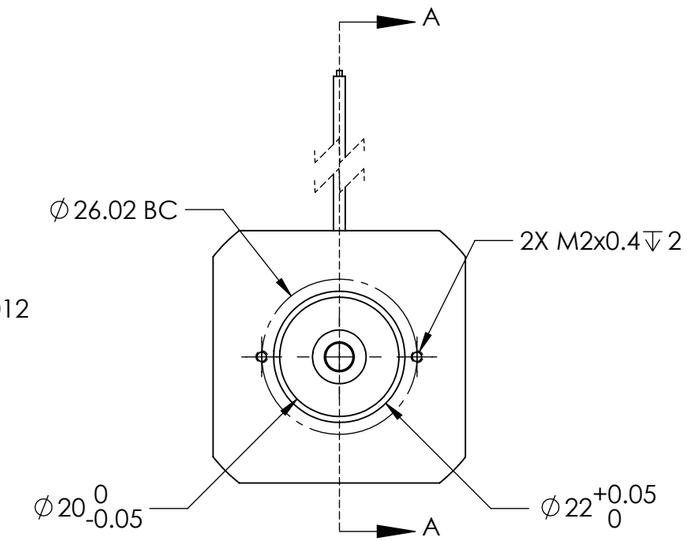

EC4280 24 Specifications		
Parameter	**Unit**	**Value**
Rated Power	W	80.00
Rated Voltage	VDC	24.00
Continous Stall Torque	N-m	0.20
Max Torque	N-m	0.40
Rated Speed/Max Speed	rpm	4000/6800
Rated Current	$A_{(peak)}$	6.06
Max.Current	$A_{(peak)}$	12.12
Ke : Back EMF Constant	$V_{(peak)}$/krpm	3.50
Kt : Torque Constant	$Nm/A_{(peak)}$	0.033
Resistance	Ω	0.55
Inductance	mH	0.56
Moment of Inertia	gcm^2	72.00
Number of Poles	#	8.00
Mass	g	650

Winding Type	3-phase
Hall Sensors	120° electrical spacing
Pole Count	8
Shaft Runout	.025 mm
Radial Play	.02 mm @ 450 g
End Play	.08 mm @ 450 g
Max Radial Force	28 N @20 mm from flange
Max Axial Force	10N
Insulation Class	B
Dielectric Strength	500 VDC for 60s
Insulation Resistance	>100MΩ, 500 VDC

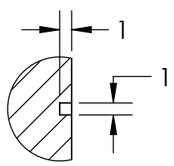

DETAIL B

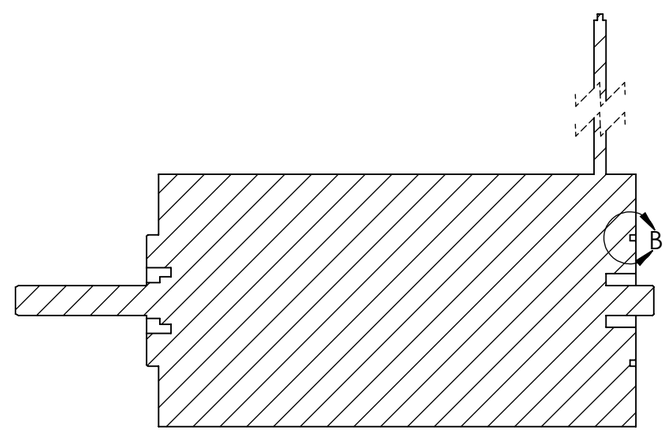

SECTION A-A

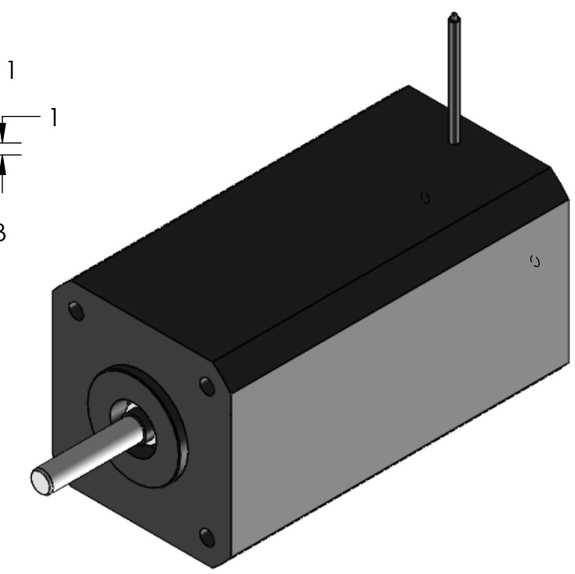

HALL SENSORS AWG 26				
5VDC	GND	A	B	C
RED	BLK	BLU	GRN	WHT

Motor Cable		
A	B	C
WHT	RED	BLK

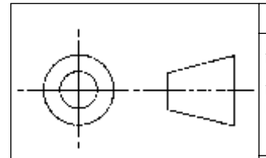

THIS DRAWING CONTAINS PROPRIETARY INFORMATION OF THE ORBEX GROUP AND MAY NOT BE IN WHOLE OR IN PART DUPLICATED OR DISCLOSED OR USED FOR MANUFACTURE OF ANY PART DISCLOSED HEREIN WITHOUT WRITTEN PERMISSION OF THE ORBEX GROUP.
CONFIDENTIAL

UNLESS OTHERWISE SPECIFIED:
DRAWING SYMBOLS & TOLERANCES PER ANSI Y14.5
DIMENSIONS ARE METRIC
TOLERANCES:

DECIMALS	LINEAR	ANGULAR
.X	±0.2	±0.5DEG
.XX	±0.02	±0.2DEG
.XXX	±0.005	±0.01DEG

INTERPRET GEOMETRIC TOLERANCING PER: ANSI Y14.5

MATERIAL: SEE CHART
FINISH: Clean
DRAWN: Sun KPO 10/11/2019

Orbex Group

TITLE:
EC4280 24

SIZE	PRT. NO.	REV
B	100087	**A**

SCALE: 1:1 | SHEET 1 OF 1